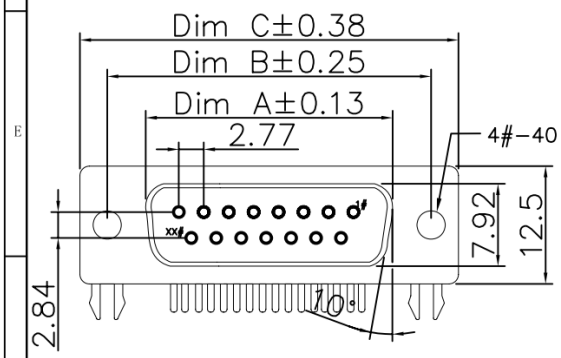

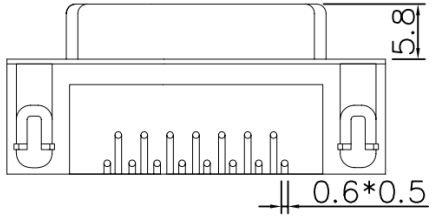

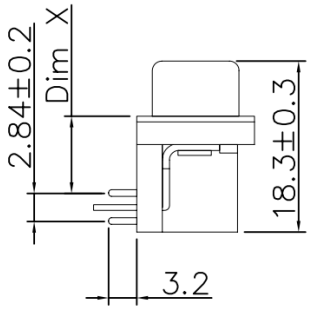

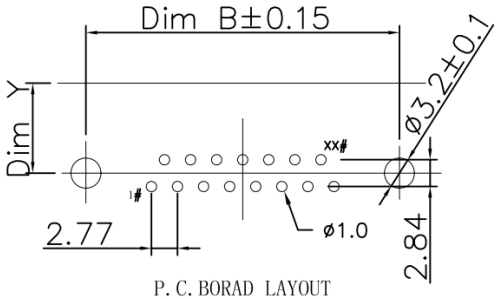

P. C. BORAD LAYOUT

37P	54.83	63.50	69.32	8.08	9.50
25P	38.38	47.04	53.04	8.08	9.50
15P	24.66	33.32	39.14	8.08	9.50
9P	16.33	24.99	30.81	8.08	9.50
POS. NO.	A	B	C	X	Y
	DIMENSION				

SPECIFICATIONS:
Current rating:3.0A AC/DC
Voltage rating:250V AC/DC
Contact resistance:30m ohm MAX
Insulation resistance:5000M ohm MIN
Withstanding voltage:1000V AC for one minute
Operating temperature range:-40°C~+85°C

MATERIAL AND FINISH
Insulator:PBT+30%G.F(UL94V-0)
Contact:Copper Alloy Nickel Undercoated
Selective Gold Plated
Finish:Metal Iron With Tin Plated

Ordering Information

SUB — DRXX — X0XX — XXX

Number of contacts

Code	Definition
A	9 PIN
B	15 PIN
C	25 PIN
E	37 PIN

Housing Type

Code	Definition
M	Male
F	Female

Mounting Options

Code	Definition
6	SCREWED HEX SCREW ON BOARD LOCK
7	RIVETED W/ BOARD LOCK/WASHER
8	RIVETED W/BOARD LOCK/ WASHER/HEX SCREW
9	RIVETED W/ BOARD LOCK/WASHER/ ATTACHED HEX SCREW

Contacts Material

Code	Definition
2	Brass
7	Phosphor bronze

Contact Plated

Code	Contact Area
A	Gold 1u"/Light Tin
B	Gold 3u"/Light Tin
C	Gold 5u"/Light Tin
E	Gold 15u"/Light Tin
F	Gold 30u"/Light Tin

Insulator material

Code	Definition
0	PBT
2	NYLON

Insulator color

Code	Definition
0	Black
6	Blue
9	White

Mark

Code	Definition
0	NONE
2	Nextron

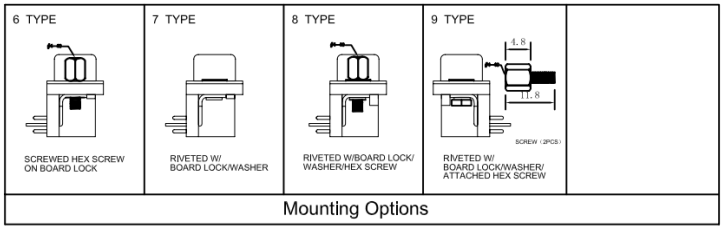

JH JM 深圳市君灏精密工业有限公司
ShenZhen JunHao Exactitude Industry CO.,LTD

PART. NAME: D型XX芯弯式PCB焊接插座（孔）				TITLE:	
PART. NO.: SUB-DRBF-607A-002				DWG NAME:	
APPROVED BY	CHECKED BY	DESIGNED BY	DRAWN BY	CUSTOM NO.:	Toleance
Jonnson	Jeff	allan	Jacky	UNITS: mm SCALE: REVISION:	x. ±0.50 x.x ±0.30 x.xx ±0.10 xx° ±1°